Royale Basic - RB-2430R - Specification Sheet

Features

- Cool white LED Light
- Touch button with dimmer function
- Mirrored interior with 3 adjustable glass shelves
- Includes installation hardware for recess mounting
- Can be recessed or surface mounted
  (surface mounting is included)
- Energy efficient LED lighting:

Kelvin	6500
CRI	80+
Lumens*†	810
R9 Value*	50+
Watts (AC)	35
Lumens per Watt	90

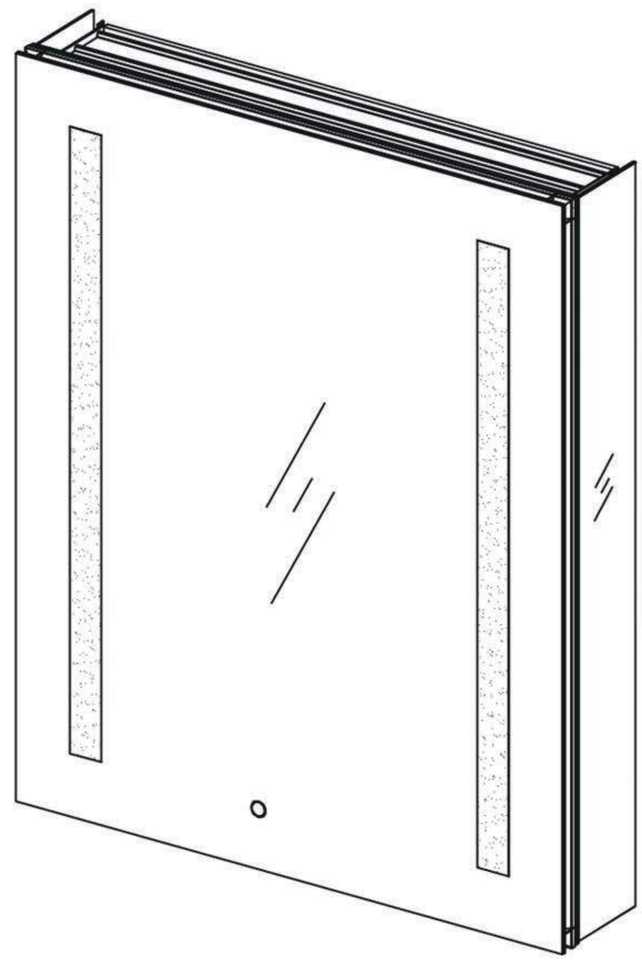

Construction

- Grey aluminum body and door frame
- 3 mirror design – rear of cabinet and both sides of door
- Concealed finger pull-door edge
- Two pieces DTC 90° self-closing hinges on right hand
- Adjustable shelving at 2 1/3" (60 mm) increments
- Single field wire into electrical shelf - Front access serviceability

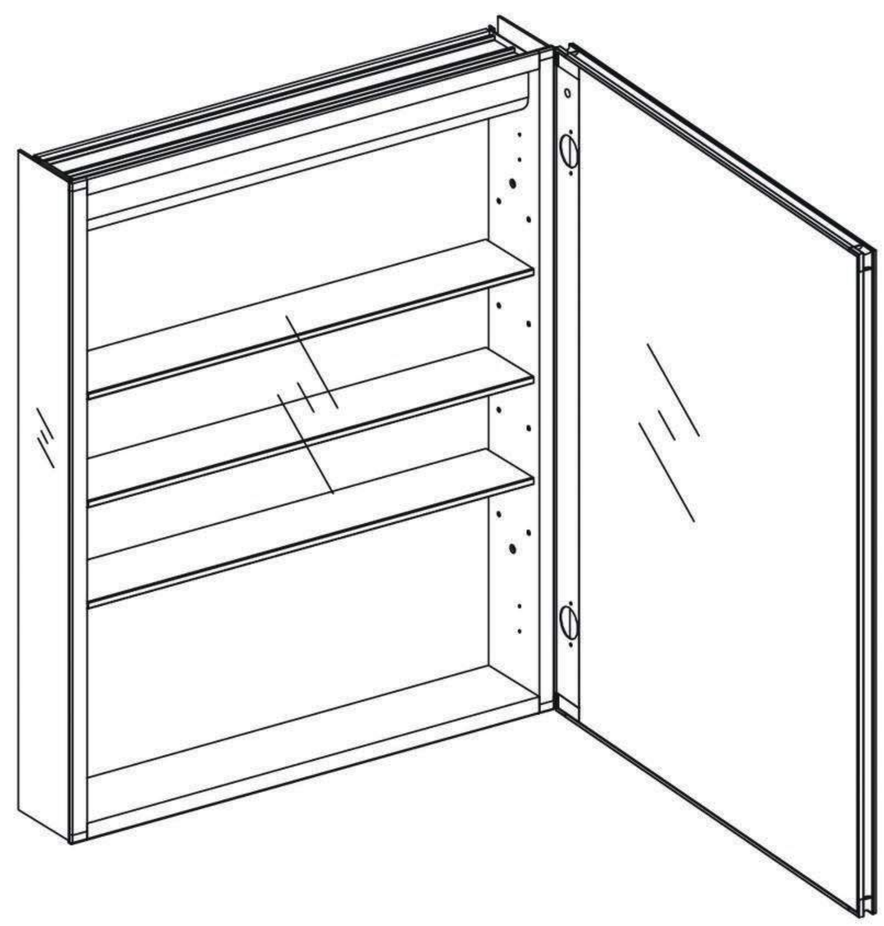

Codes/Standards Applicable

Electric Option Models are ETL certified to:

- UL 962
- CSA Standard C22.2 No. 68

Dimensions

Height: 30" (762 mm)

Width: 24" (610 mm)

Depth: 5” (127 mm) When surface mounted

1" (25 mm) When recessed

USA/Canada: 800-654-0016
www.aquadomusa.com

Installation Options

- Recessed Mount - Rough Opening - 29-1/2" H x 23-1/2" W x 4" D (749mm H x 597mm W x 102mm D)
- Surface Mount - Surface Mount Kit is included

Electrical System

- 35 Watts LED Driver
- INPUT : 120VAC 60HZ 1.1A
- OUTPUT : 12VAC 3.0A
- Field wire location as shown in drawing
- 1/2" conduit (Ø 7/8" actual) electrical knockout location shown below
- Included field wire cable clamp
- Circuit Diagram

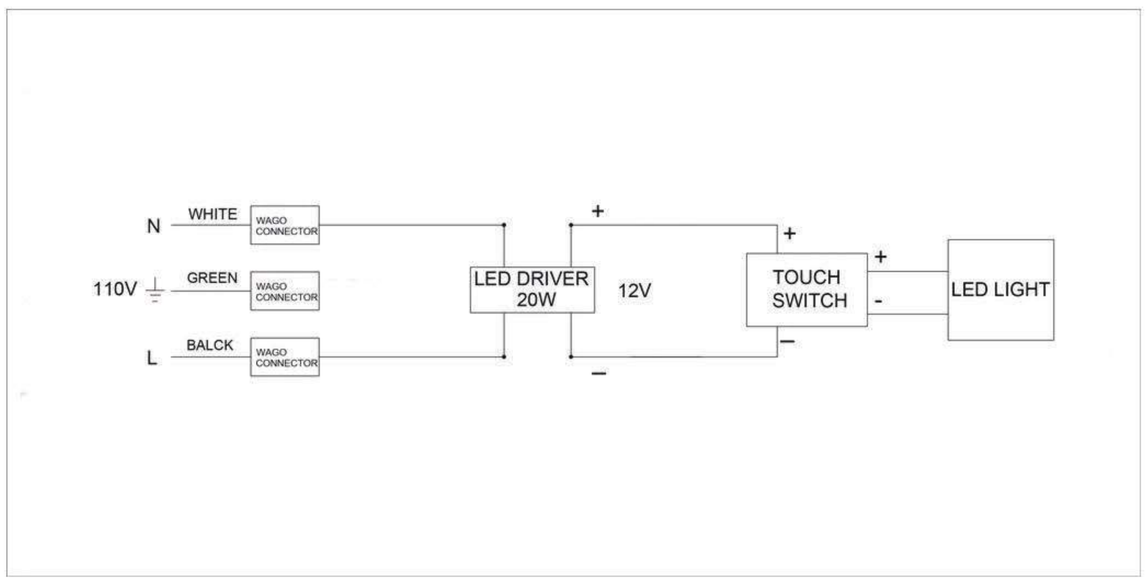

Circuit Diagram

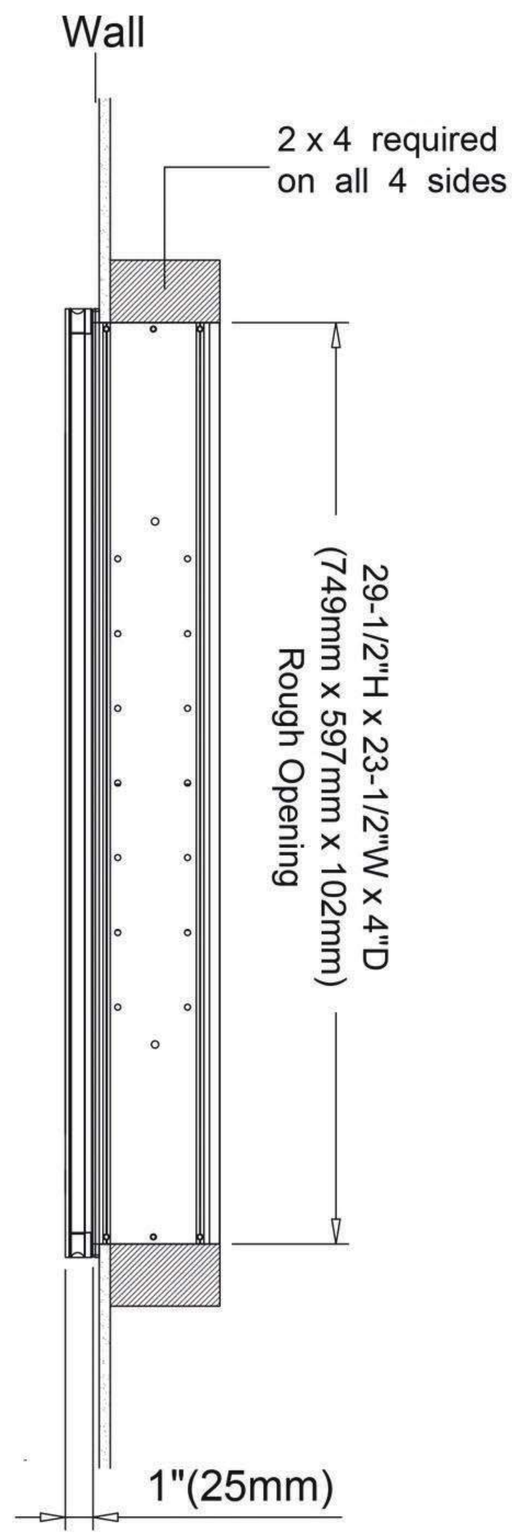

Recessed Mount

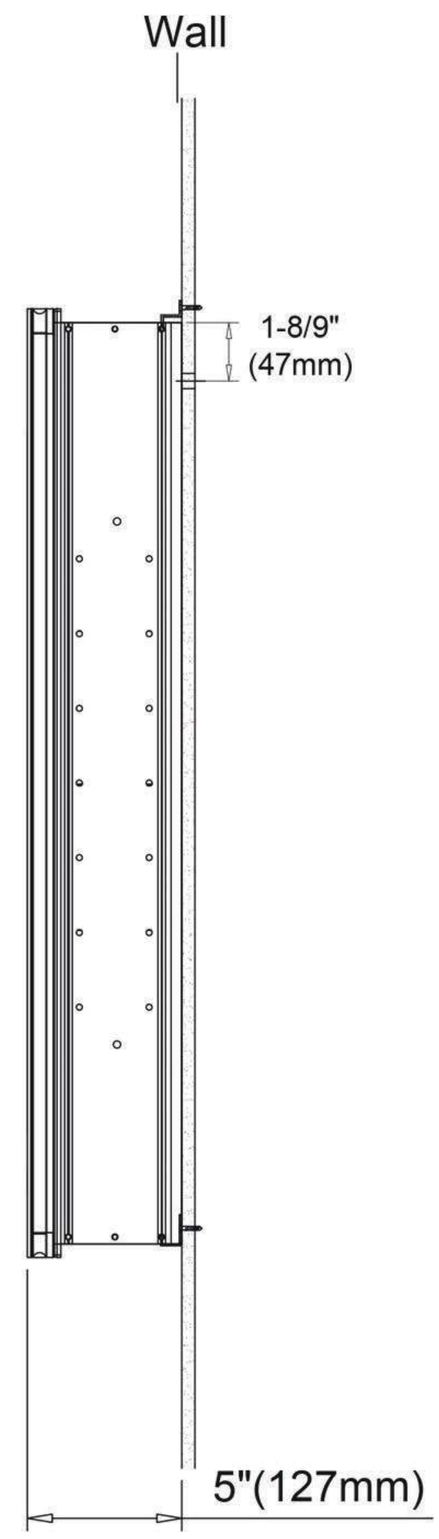

Surface Mount

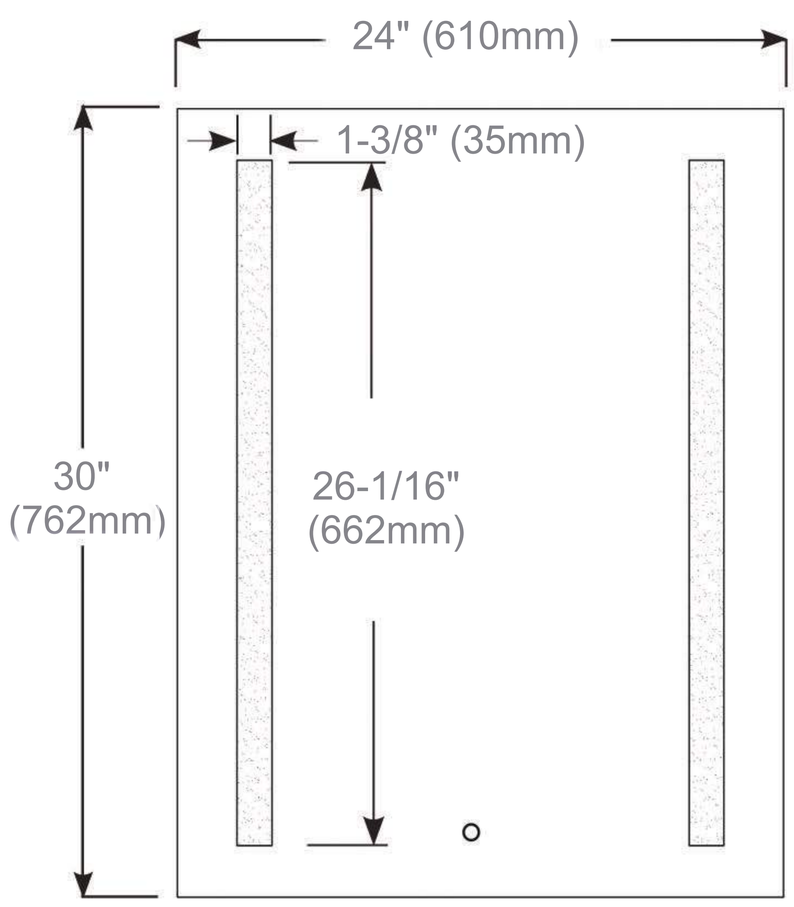

Cabinet Dimensions

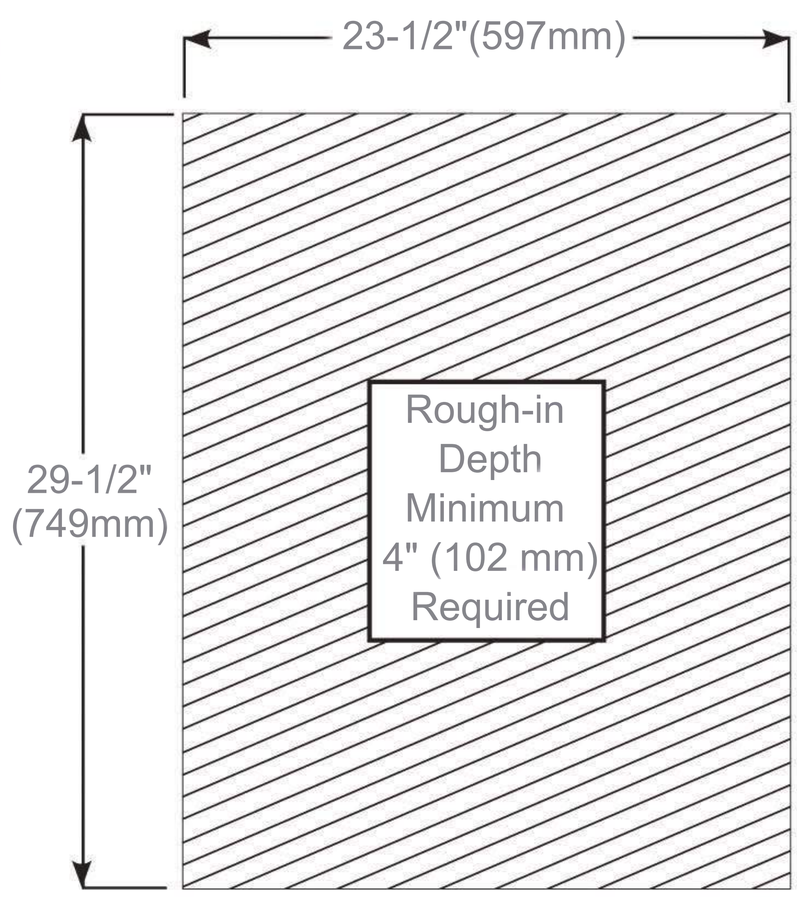

Rough-in Dimensions

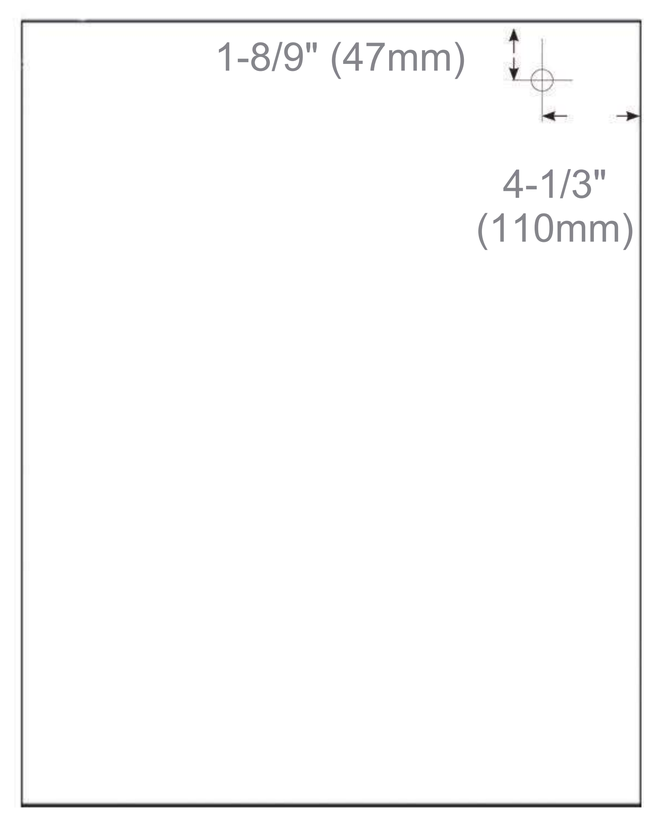

Back of Cabinet - Wire Access Location